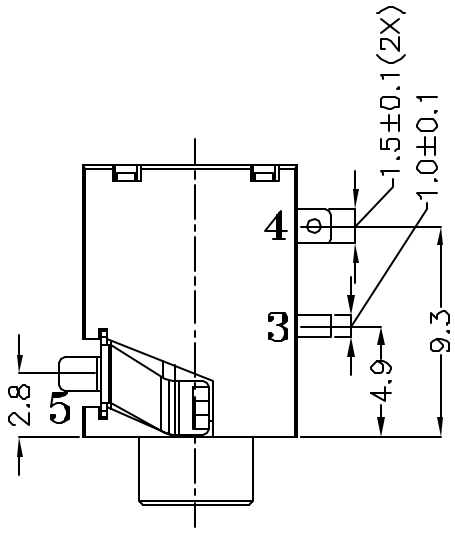

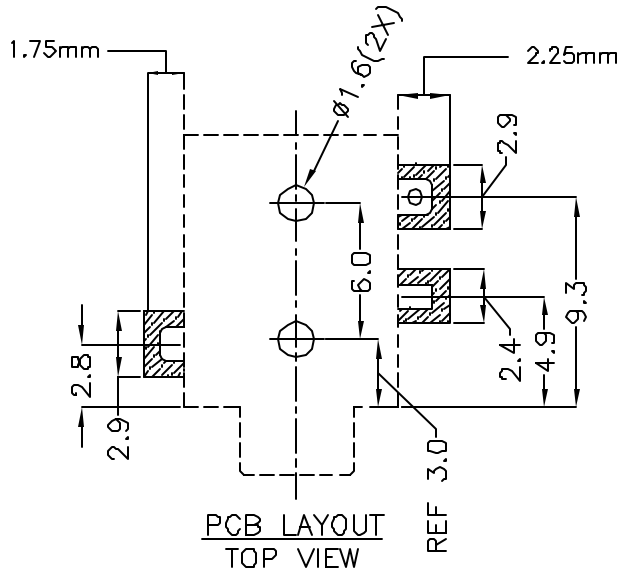

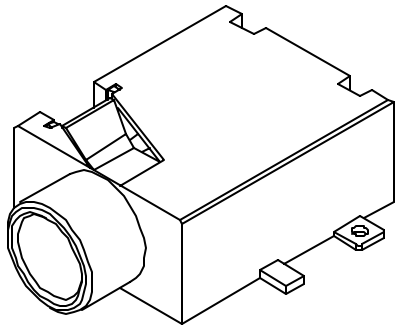

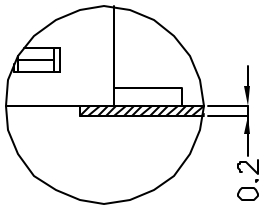

COPLANARITY

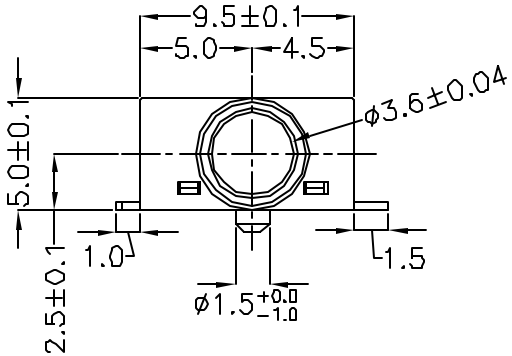

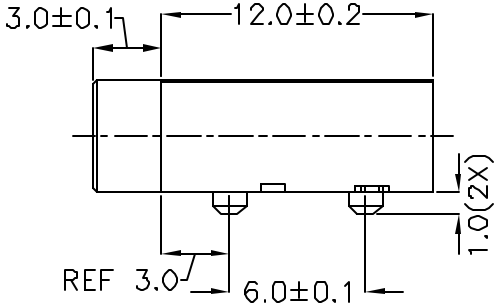

NO.	PART NAME	MATERIAL	PLATING	REMARKS
X	HOUSING	POLYAMIDE	X	UL94V0
X	BOTTOM COVER	POLYAMIDE	X	UL94V0
3	SHUNT TERMINAL	BRASS	GOLD FLASH	30 MICRONS
4	TIP TERMINAL	Cu-Ti	GOLD FLASH	25 MICRONS
5	SLEEVE (EARTH) TERMINAL	PBS	GOLD FLASH	30 MICRONS

SPECIFICATIONS:
1. RATED VOLTAGE-16 VDC
2. RATED CURRENT-300 mA
3. CONTACT RESISTANCE-100 mOHMS OR LESS UNDER ALL CONDITIONS, INCLUDING AFTER LIFE TESTING.
4. INSULATION RESISTANCE-100 MOHMS OR GREATER AT 500 VDC.
5. DIELECTRIC WITHSTAND VOLTAGE-500 VAC RMS FOR 1 MINUTE.

SCHEMATIC

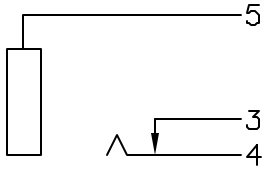

CUI INC
9815 SW Allen, Suite 103
Beaverton, OR 97005
Phone: (503) 643-4899
800-275-4899
Fax: (503) 372-1286
Website: www.cui.com

TITLE: 3.5mm SURFACE MOUNT AUDIO JACK-MONO

PART NO.	UNITS:
MJ-3510-SMT	Millimeters

DRAWN BY:	APPROVED BY:	SCALE:
Todd R. White		3X

PC FILE NAME: MJ-3510-SMT.DWG

COPYRIGHT 1999 BY CUI INC.